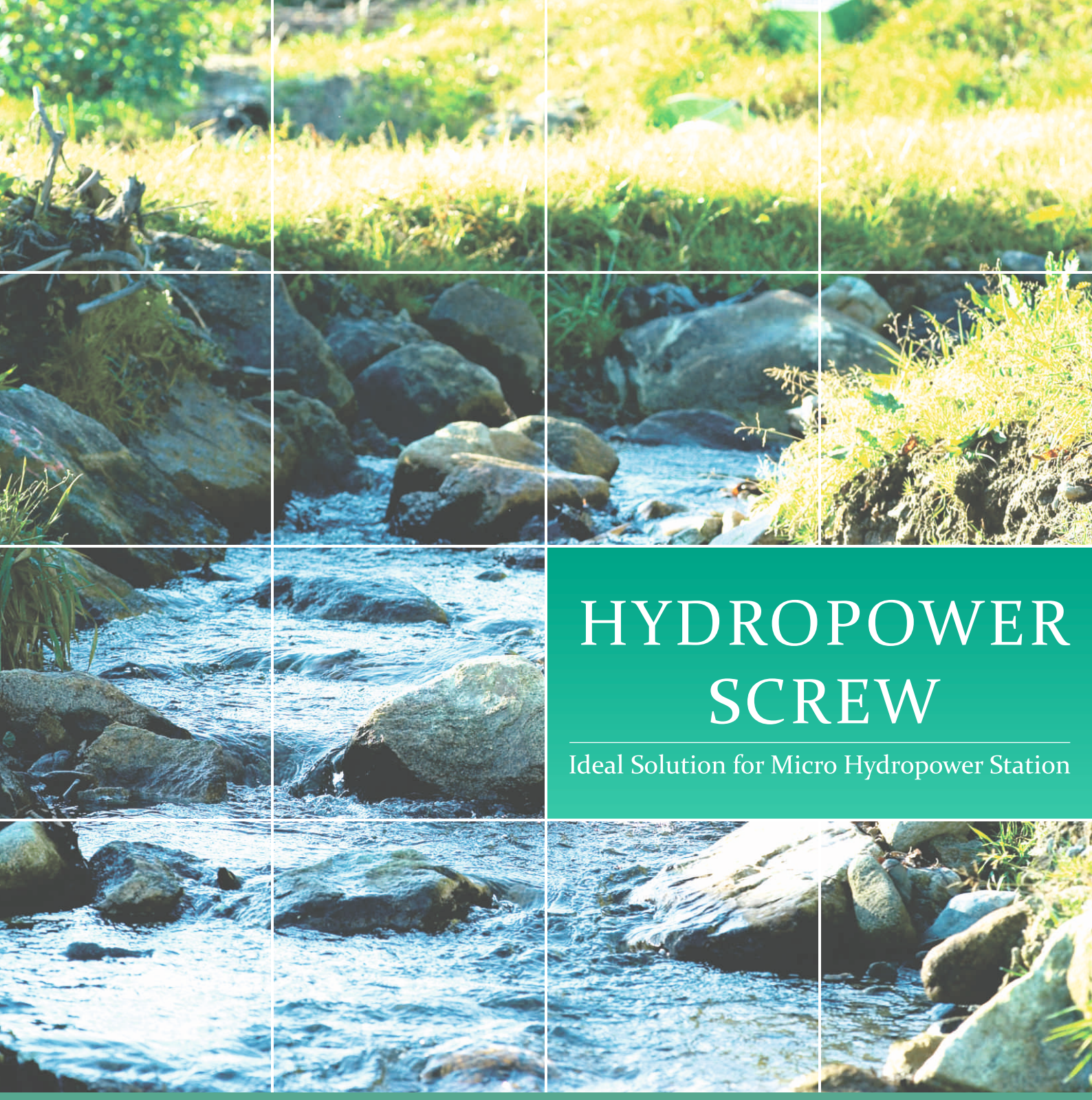

HYDROPOWER SCREW

Ideal Solution for Micro Hydropower Station

Sustainable Renewable Energy

JASH REHART



Innovation & Leadership for Over 60 Years

Jash Engineering Ltd. is an ISO 9001-2008 certified company manufacturing a wide range of equipment for water and waste water industry. Established in year 1948, today Jash offers the most diversified product portfolio for water industry comprising of water control gates, fine & coarse screening equipments, knife gate valves, water hammer control valves and process equipments like degritters, clarifiers, clarifloculators, aerators, mixers and decanters.

Jash manufactures these products under technical collaborations with varied companies such as Schuette Industrieservice - Germany, Weco Armaturen- Germany, FSM Frankenberger - Germany, Hollung - Norway, Stealth Valves - Canada & Mahr Maschinenbau - Austria.

Jash is exporting these equipment to over 25 countries worldwide. Jash presently exports these products to USA, Canada, Britain, France, Germany, Belgium, Norway, Sweden, Khazakistan, Turkey, Kuwait, Saudi Arabia, Jordan, Oman, Bahrain, UAE, Singapore, Malaysia, Thailand, Indonesia, Vietnam, Hong Kong and others.

Jash is today acknowledged as an industry leader for most of its product offering and also as a company which is able to innovate and introduce various new technologies in the market.



Regenrate & Hard Facing Technology

Established in year 1983 by Mr. Klaus Schuelin, Rehart is based in Ehingen - Germany which is located in the urban industrial triangle of Nuremberg-Stuttgart-Munich. Rehart derives its name from its initial business activities of Regenerate (RE) and Hard-facing (HART).

Rehart through its experience of producing screws for rough & fine ceramic industry and for waste water pumping, developed hydropower screw generators for cost efficient and decentralized generation of renewable electricity. With its wide experience and technical developments covered by various patents, Rehart has been able to offer virtually maintenance free Hydropower Screw generators which can be operated around the world in varied application & installation. Rehart Hydropower screws are being used in Germany, Austria, Switzerland, Italy, Belgium, France, UK, Ireland, Luxembourg, Romania, Slovenia, Turkey and USA and are generating renewable energy 24 hours a day.

Renewable Energy & Pumping Solutions





With a view to extend its water industry specific products range, Jash entered into technical collaboration with Rehart GmbH, Germany in year 2011 to offer the product line of Hydropower Screw and Archimedean Screw Pumps.

This collaboration enables Jash to manufacture & market the Rehart Hydropower Screw used for power generation using low water heads and Archimedean Screw Pump for high volume low head pumping application. The collaboration is for supply of these products to the entire market of Asia.

To manufacture these products and meet the demand of the vast region covered in the scope of agreement, Jash has invested in a new facility to manufacture such large fabricated products.

This plant having a built up area of over 155,000 sq ft is designed to handle products weighing upto 30 tonnes and annually manufactures fabricated products totally weighing over 3000 tonnes with dedicated area of 50,000 sq ft for Stainless Steel production and 100,000 sq ft for Carbon Steel production.

The plant employs latest technology to inspect, cut, bend, weld, pickle, shot blast and paint various components & products to be made. Profiled Metal cutting is done using CNC water jet cutting. Hydraulic shear and press brake are used for normal cutting & bending. All welding activity is done using certified welders.

Post manufacturing activities like bath pickling, shot blasting and painting is done under environmentally safe conditions. The final product assembly is done in isolated areas to carry out assembly in a clean environment.

This state of art manufacturing infrastructure along with proven German technology enables Jash to offer reliable and high quality products at economical cost for the Indian & Asian market. With almost all the critical manufacturing facilities in-house, this plant gives flexibility to meet customized needs of the clients and urgent deliveries whenever required.



Water Jet Cutting



Bending & Shearing

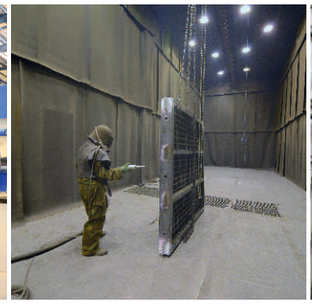

Shot Blasting Room (24 x 6 x 6m)



Painting Booth (24 x 6 x 6m)

JASH REHART

Hydropower Screw

Application : *Power production using low water heads*

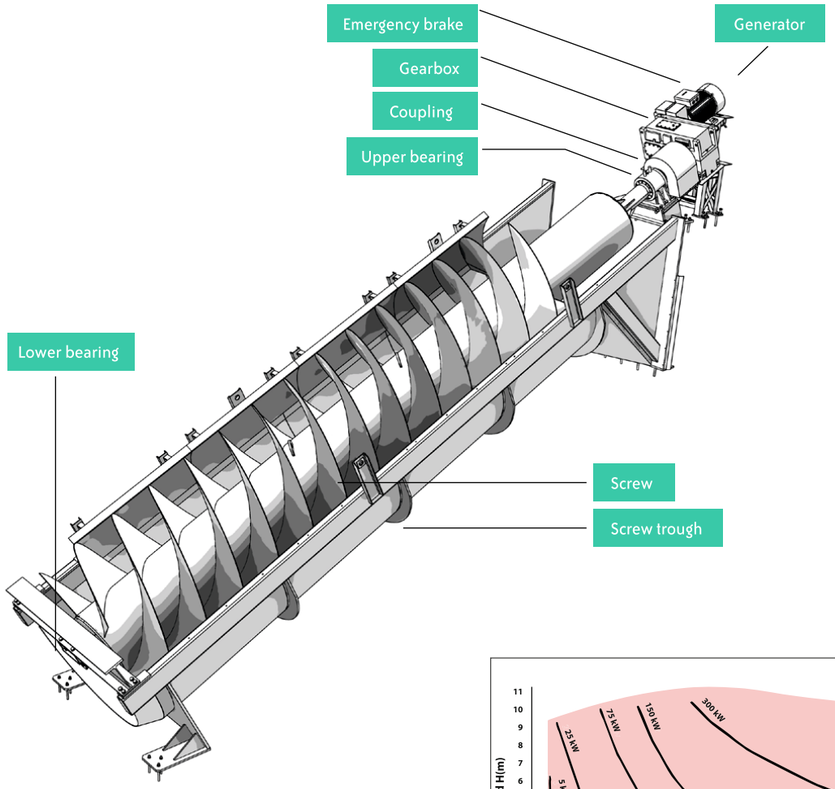

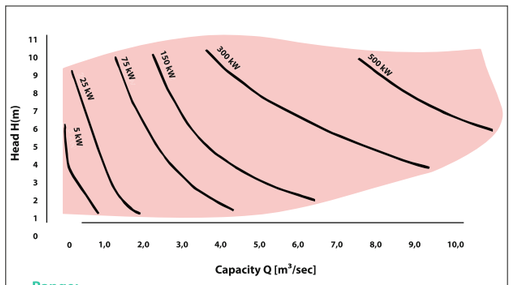

Range:

Water Flow: From 0.1 m^3/s to 10 m^3/s **Head:** From 1 mtr to 10 mtr

Efficiency: Upto 85% **Output:** Upto 500 kW

Operation principle:

The water flows down through the screw and this initiates its rotation. This rotation is transmitted to the gear box and subsequently to generator with increased rpm to produce electricity. The inlet channel has a manual coarse screen to hold back bigger foreign floating materials coming with water and an emergency gate for isolation of flow during maintenance.

Typical installations :

- Overflow weirs/ check dams on rivers
- River/ streams flowing down inclines
- Steps/ falls provided in canals to match contours
- Treated water outlets of Sewage/ effluent plants
- Industrial Process water outlet from Power, Steel & Paper plants
- Replacements of water wheels & other type of turbines



Power calculation general thumb rule:

$$P = Q \times g \times H \times \eta_0$$

P = Power in kW
Q = Flow in m^3/sec
g = gravity, 9.81 m/s^2

H = Head in Meters
η_0= Overall Efficiency, aprx 75%



Murpal Durham, England

Capacity Q=	8.0 m^3/s
Head H=	1.73 m
Power P=	99 kW
Diameter D=	3.6 m
Bladed Length BL=	5.27 m



The Hydropower Screw Advantage

Ideal solution for low head application
Hydropower Screw offers high efficiency generation potential with minimal civil interface for low water head installations.

Efficient despite variable water heights
The Hydropower Screw is able to cope with varying water flows (as low as 10% partial load) and heads and still generates electricity.

Eco friendly
The Hydropower Screw allows smaller sediments to pass through and so natural sediment structure of river bed is maintained. It also improves oxygenation and therefore the quality of water which helps in growth of fish & fauna.

Fish friendly
Unlike the traditional turbines, the Archimedean screw is a non pressurized operating system which operates at low revolution speed. This allows most of the fishes to travel downstream through the screw without causing any harm to them. Upstream travel of fishes can be ascertained by provision of separate fish ladders.

Quiet operation
The noise specific Rehart screw design & workmanship ensures smooth running & quiet operations. As a result these could be installed close to residential areas.

Less civil work
Depending on type of screw offered, the extent of civil works required is very less. As a result fast project installation/ commissioning with lesser inconvenience to nearby community / residents becomes possible.

Fast installation
Whether as a compact unit, semi- compact or steel trough type, every Hydropower Screw system is delivered ready-made. This enables installation within days of receipt of equipment.

Negligible operational cost
The sophisticated yet simple to use design needs no operating personnel. Monitoring is carried out via computers and monitoring data could be availed via text messages & emails. This result into negligible cost of its operation.

Low maintenance
Rigid design, low rotational speed and patented bearing system, ensures low product maintenance and breakdowns.

High reliability
All parts are manufactured to high quality standards. This ensures reliable generation of electricity and long life of equipment.

< *Installation possible adjacent to residential area due to quiet operation.*

Fish ladder for upstream travel of fishes. >



Series



CR: Compact type

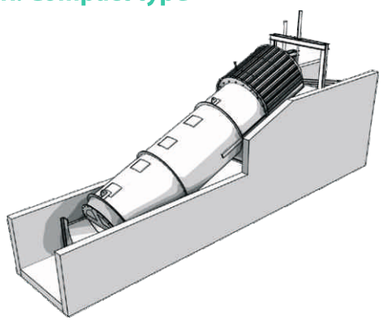

System completely factory assembled.
All Components have been integrated.
The Trough is designed as Tube. Suitable for low and medium water volumes. Output unit under weather protection cover, housing not required.

CR: Totally enclosed compact type

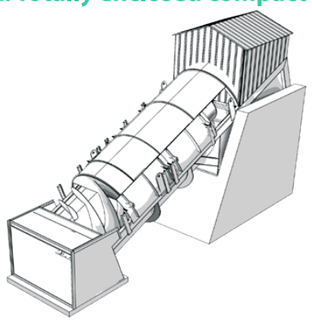

System completely factory assembled.
All Components have been integrated.
Only a strip footing at the outlet and a channel for the inlet is required on site.

BS: Semi-compact type

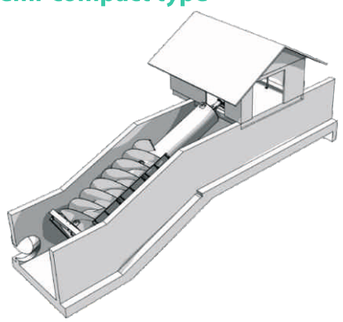

The trough is fastened at the precast structure and then with concrete. Practical mechanical engineering, high expenditure for hydraulic engineering.

SH: Steel trough for casting

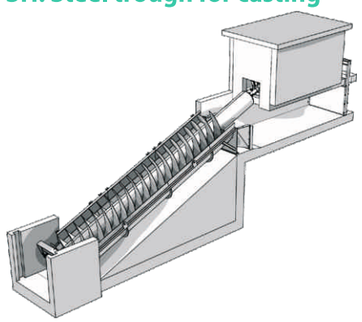

The trough is self supporting and doesn't need casting. The Output unit is located on a foundation of a building.

Assembly

Assembly of Hydropower screw series CS

Step 1 >

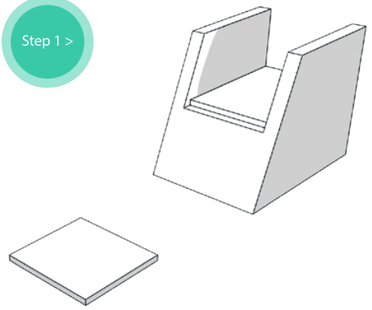

Structure: Foundation at the bottom inlet channel and at the top

Step 2 >

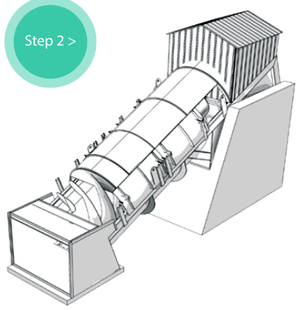

Everything is factory assembled. Therefore the system is lifted into position and fixed on site.

Assembly of Hydropower screw series SH

Step 1 >

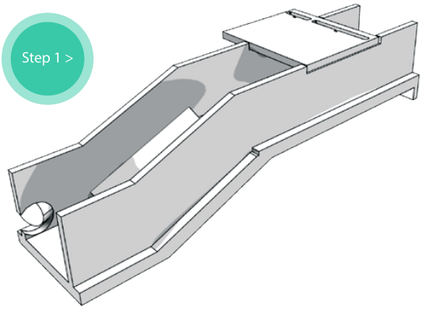

According to planning specification this structure is to be built before the system is delivered.

Step 2 >

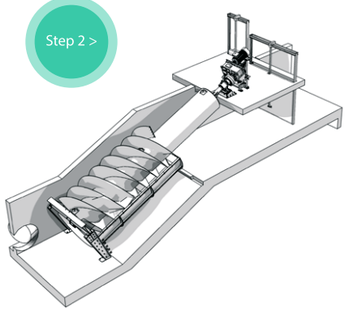

Fixation of the trough. Bolting of upper bearing and gearbox console.

Step 3 >

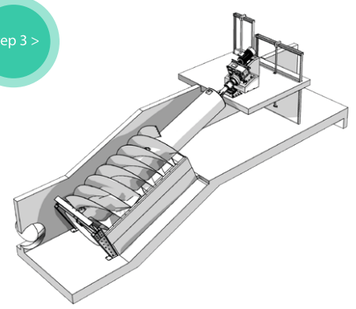

The Casting of screw trough and gearbox console with concrete is a mandatory work step.

Step 4 >

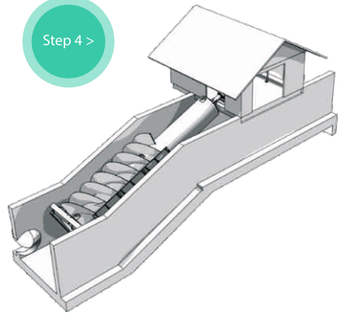

Final assembly fix deflector shields, align the screw, finalize electrical works, complete power house.

Customer focused End to End Solution

Feasibility consultancy

We check the location of possible installation and water availability on the basis of facts and data measured. To this Rehart, Germany brings the experience it has gained in the construction of system all over the world and suggests the correct product to be used. Based on this advice from Rehart, we calculate the yield, necessary investment and pay off time. Our consultancy service, hence assures feasibility and efficiency for your project so that you know the conditions under which your investment will be successful.

Supply complete equipment package

Once the feasibility is ascertained and ordering is completed then our design & manufacturing team works out an integrated solution comprising of Trash Screen, Hydraulic gate for isolation, bypass gate (if required) and hydropower screw. Upon approval, the equipment is then manufactured and supplied in pre assembled condition from our plant.
Jash is a renowned manufacturer of screens & gates and supplies these with hydropower screw & electrical control system as a complete package to ensure single source solution.

Installation & commissioning

If the civil works are ready, then receipt of pre assembled equipment enables rapid installation & commissioning by an experienced team. Proper planning can ensure installation as well as commissioning within a week of receipt of equipment at site.

Maintenance & service

A software supported maintenance service backed by trained service personnel supports the running operations of the supplied equipment. Depending upon location of installation, quantity of screws installed, type of problem observed and the maintenance contract signed with the company, the company assures prompt response to any problem within the shortest possible time.

With Jash-Rehart the customer is assured of an end to end customer focused solution that ensures that he is able to recover his investment within the period as projected.



Complete equipment package

- Inlet screen with automatic hydraulic sluice gate *(Above)*
- High efficiency gearbox with generator *(Opposite Page)*



Patented bearing system with forced lubrication for low maintenance >

Low Maintenance



JASH REHART

Comparison with Alternate Solutions



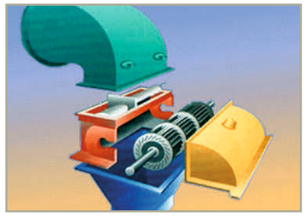

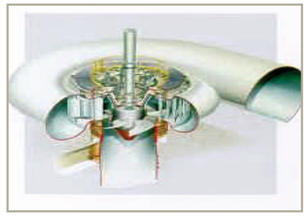

	Screw	Cross Flow Turbine	Kaplan Turbine
Turbine Type	**Archimedean Screw Type**	**Impulse Type**	**Reaction Type**
Efficiency	Up to 90%. Remains constant with varying load.	Up to 85%. Remains constant with varying load.	Above 90%. Comes down drastically at varying load.
Output	Screw output varies proportionally to inlet flow conditions and there is no risk of damage from running dry.	Output varies proportionally to inlet flow conditions.	Requires a constant flow & Head to generate power. Output comes down exponentially at part inlet flow conditions. Generally does not perform at low flow in summer season.
Generation Capability	Good for 5kW to 500 kW generation	Good for 5 kW to 100 kW generation.	Good for 75 kW to 5 MW generation.
Head	Best for Range from 1.0 mtr to 10 mtr	Best for Range rom 1.75 mtr to 40 mtr	Best for Range from 2.0 mtr to 50 mtr
Discharge	Can work efficiently from 0.2 m^3/s to 10 m^3/s.	Can work efficiently from 0.04 m^3/s to 5 m^3/s.	Can work efficiently from 3 m^3/s to 30 m^3/s.
Ease of Installations	Factory pre-assembled, less civil work, takes shorter installation time.	Requires Penstock & draft tube.	Requires Penstock & draft tube. Very expensive civil works is required.
Installation Period	Can be installed in, maximum, 2-3 months.	Can be installed in 5-6 months	Due to large civil work, installation requires 10-12 months
Durability	Can easily handle Debris, wooden pieces, slush, plastics, raw sewage Fish friendly.	Can Handle only clear water. Even a part debris can struck the blades and damage the turbine.	Can handle only clear water. Even a part debris can struck the blades and damage the turbine.
Wear and Tear	Negligible Wear & Tear because of low speed(max 40 rpm). Cavitation & erosion cannot affect the turbine	High. Due to high speed, cavitation & erosion.	Very High. Due to high speed, cavitation & erosion.
Reliability	Excellent reliability. Not effected by climatic conditions. Can run for years.	Requires regular attention to run efficiently.	Need overhaul after a span of some years. Requires regular attention to run efficiently.
Maintenance	Negligible maintenance & long bearing life due to low speed. Maintenance is inexpensive & can be done by operators.	Regular maintenance is required due to high running speed. Maintenance is expensive & can be done only by skilled person.	Regular maintenance is required due to high running speed. Maintenance is very expensive & can be done only by O&M contractors
Environment Compatibility	Environmentally more attractive as fish compatible, cutting of trees and displacement of people are not required.	Fish incompatible.	Fish incompatible.

Installations



500 kW system SH, Hausen im Wiesental

From Large to Small, we have a solution for all your needs.

Jash-Rehart hydropower screws come in varied construction options and allows you to tap renewable energy potential from the largest rivers to the smallest streams . The hydropower screw offers possibility of minimal intervention to existing water systems & flow with reliable and everlasting generation of clean energy.



48.1 KW System, Baiersdorf



17.4 kW System, Lohram Main



5 kW System, Sachsenflur, Germany

The JASH Advantage

Technical prowess in large custom engineered products

Jash has been making large sized custom engineered products for over 60 years and has invested in one of the best manufacturing set up in the water industry for such products. This is backed up by a dedicated team of over 100 engineers in marketing, design, manufacturing, quality control and service. The technical prowess accumulated over the years of manufacturing large custom products has enabled the company to execute projects worldwide for such equipments. This technical prowess also enables the company to continuously improve its product design with a view to suit customer requirement and ensure delivery of cutting edge products.

Absorption of technology

Jash has been instrumental in bringing new technologies to India under technical collaboration with the best in the world. Partnering with such companies enables us to leverage on their technological knowhow and deliver cost effective equipments built on the latest technology. Understanding these technologies, manufacturing the products in compliance with collaborators standards and then supplying the most appropriate solution to the customer at an affordable price is a strategy that Jash has successfully followed for last many years.

This strategy has resulted into Jash becoming an industry leader in India for products like Fine screens, Coarse screens, Knife gate valves etc being manufactured under technical collaboration with various European companies. This proven skill set honed over a decade in launching new technologies in India is what Jash offers even for the latest hydropower screw technology from Rehart, Germany.

Financial strength

Inspite of best of experience and practices followed by the industry, mistakes do happen. A good company is one that is able to absorb the fiscal pain of such mistakes and improve upon it to keep the customer satisfied. With turnover in excess of Rupees 100 crores (USD 20 Million – year 2012) Jash has the financial strength to support its customers at all stages and ensure that they recover their investment.

Trusted name & legacy

Jash has been a landmark name in the water and wastewater equipment industry. The company's legacy of over 60 years has been built on strong and unparallel trust of all the Government authorities, consultants and engineering construction companies. The company's uncompromising quality and service standard has bolstered our strong relationship with customers, partners and other stake holders. With support and trust of all these stake holders, Jash has consistently grown over the decades to become one of the largest equipment manufacturing companies in India in this field.

You can count on this trust and legacy while opting for the equipment that has to ensure return on your investment for next 25 years.



Stainless Steel Clarifiers at STP, Doha, Qatar



Floating Surface Aerators installed at Sewage Treatment Plant, Ipoh, Malaysia.



Sluice Gate & Trash Screen at Kerajaan Storm Water Management and Road Tunnel Project. Kualalampur, Malaysia



Suspended Trash Rake Screen and Sluice Gate at Haji Ali Storm Water Pumping Station, Mumbai, India



SS Sluice Gates at Punggol Serangoon Water Pumping Station, Singapore.



Roller Gates, Reelfoot Lake, Obion counties, Tennessee, USA



Kaiserhammer, Germany
Steel trough for casting SH
Capacity Q = 2.5 m^3/s
Head H = 2.6 m
Power P = 48 kW
Diameter D = 2.5 m
Bladed Length BL = 7.47 m (3 flights)



Vadodra, India
Hybrid Type BS(right)
Capacity Q = 1.0 m^3/s
Head H = 5.0 m
Power P = 33 kW
Diameter D = 1.7 m
Bladed Length BL = 10.35 m(4 flights)

Prima, Germany
Compact Type CS
Capacity Q = 0.5m^3/s
Head H = 2.7 m
Power P = 11 kW
Diameter D = 1.3 m
Bladed Length BL = 7.5 m



Indore, India
Hybrid Type BS(right)
Capacity Q = 0.6m^3/s
Head H = 5.0 m
Power P = 19 kW
Diameter D = 1.4 m
Bladed Length BL = 10.23 m (4 flights)





Baiersdorf, Germany
Compact Type BS
Capacity Q = 4.5m^3/s
Head H = 1.5 m
Power P = 48.1 kW
Diameter D = 3.2 m
Bladed Length BL = 5.08 m



Fröndenberg, Germany
Compact Type CS Floating
Capacity Q = 3.0 m^3/s
Head H = 2.4 m
Power P = 54.2 kW
Diameter D = 2.8 m
Bladed Length BL = 6.26 m (4 flights)

Haddo, Ireland
Totally Enclosed tube CR
Capacity Q = 0.5 m^3/s
Head H = 5.0 m
Power P = 16 kW
Diameter D = 1.4 m
Bladed Length BL = 10.47 m (3 flights)



Hann Munden
Compact Type CS
Capacity Q = 4.25 m^3/s
Head H = 2.6 m
Power P = 70.91 kW
Diameter D = 2.7 m
Bladed Length BL = 7.24 m



Sustainable Renewable Energy

JASH ENGINEERING LTD.

Regd. Office:
31, Sector 'C', Industrial Area,
Sanwer Road,
Indore - 452015 (M.P.), India

Ph: +91-731-2720143, 4232900, 6732700
Fax: +91-731-2720499
E-Mail: info@jashindia.com
URL: www.jashindia.com

ISO 9001 BUREAU VERITAS Certification

UKAS MANAGEMENT SYSTEMS 008

Pictures shown are general, unless specific job names are listed.
Manufacturer reserves the right to depart from the catalogue specifications and illustrations.